Clarke®

PUMP



SUBMERSIBLE WATER PUMP

MODEL NO: CSE2B

PART NO: 7239254

OPERATION & MAINTENANCE INSTRUCTIONS

UK CA | CE

ORIGINAL INSTRUCTIONS

GC 05/26

INTRODUCTION

Thank you for purchasing this CLARKE Submersible Water Pump. This pump is designed for pumping clean water or water containing solids in suspension with the ability to pump solid material in suspension however, the outlet elbow and delivery pipe diameter will restrict this. It is not designed for pumping slurry, sludge, mud or heavily polluted water, or any water containing chemicals or other acidic contaminants including salt water.

Pumps fitted with float switches are suitable for permanent or semi-permanent installations where it is necessary to maintain water at a particular level. As the water level rises, the float switch will rise and start the pump. As the water level falls, so will the float switch until it stops the pump. Float switches are factory set to provide the correct on/off switching mode, however, you can adjust the level at which the pump cuts out by sliding the float switch cable in its clip attached to the handle, to either shorten or lengthen as required. The shorter the cable, the earlier it will cut out and therefore, the deeper the water will remain at this point.

SPECIFICATIONS	**CSE2B**
Outlet thread size	G½"/12mm
Outlet adaptor sizes	1" /1¼"/1½"
Operating voltage & frequency	230V ~ 50Hz
Motor rated power	900 W
Rated input amperage	2.5 A
Ingress protection rating	IPX8
Maximum Head	9.5 M
Working pressure	0.95 bar
Maximum flow rate	15,000 L/hr
Maximum depth	7 M
Weight	5.85 kg
Cable length	10 M
Dimensions not including the elbow	170 x 180 x 315 mm
Lowest pump suction level	5 mm
Lowest pump starting level	100 mm

SAFETY PRECAUTIONS

1. This pump is designed to pump WATER ONLY. **NEVER** use for pumping flammable liquids or chemicals.
2. An approved Residual Current Device (RCD) which has a tripping current of less than 30mA must be used when pumping from ponds or swimming pools.
3. **NEVER** carry the pump by the mains lead or float switch.
4. **NEVER** pull the power lead to disconnect the pump from the power socket.
5. Your submersible pump may only be used for pumping water from a swimming pool when there is no person or animal in the pool.
6. **ALWAYS** disconnect the pump from the electrical supply before placing it into, or removing it from the water and before any cleaning or maintenance.
7. **ALWAYS** use the moulded handle with a rope or cable attached when lifting the pump. **NEVER** lift the pump by the mains cable or the float switch cable.
8. **DO NOT** allow children to use or play with the pump, cables or connections, or be involved with any cleaning or user maintenance.
9. Disconnect the pump from the power supply when not in use.
10. Have the pump repaired by a qualified person.
11. Keep the mains cable away from heat, oil and sharp edges.
12. **ALWAYS** check the plug, power cable and float switch cable for damage before use. **DO NOT** use if damaged. Refer to qualified service personnel for repair.
13. If you have to use an extension lead with this product, it must be designed for outdoor use and incorporate a cable suitable for use with Class I appliances.
14. The pump may be used by persons with reduced physical, sensory or mental capabilities, or lack of experience or knowledge if they have been given supervision or instruction concerning the use of the product in a safe way and if they understand the hazards involved.

ENVIRONMENTAL RECYCLING POLICY



Through purchase of this product, the customer is taking on the obligation to deal with the WEEE in accordance with the WEEE regulations in relation to the treatment, recycling & recovery and environmentally sound disposal of the WEEE. In effect, this means that this product must not be disposed of with general household waste but according to the laws governing Waste Electrical and Electronic Equipment (WEEE) at a recognised disposal facility.

If disposing of this product or any damaged components, do not dispose of with general waste. This product contains valuable raw materials. Metal products should be taken to your local civic amenity site for recycling of metal products.

Parts & Service: 020 8988 7400 / E-mail: Parts@clarkeinternational.com or Service@clarkeinternational.com

ELECTRICAL CONNECTIONS

WARNING: READ THESE ELECTRICAL SAFETY INSTRUCTIONS THOROUGHLY BEFORE CONNECTING THE PRODUCT TO THE MAINS SUPPLY.

Before switching the product on, make sure that the voltage of your electricity supply is the same as that indicated on the rating plate. This product is designed to operate on 230VAC 50Hz. Connecting it to any other power source may cause damage.

This product may be fitted with a non-re-wireable plug. If it is necessary to change the fuse in the plug, the fuse cover must be refitted. If the fuse cover becomes lost or damaged, the plug must not be used until a suitable replacement is obtained.

If the plug has to be changed because it is not suitable for your socket, or due to damage, it should be cut off and a replacement fitted, following the wiring instructions shown below. The old plug must be disposed of safely, as insertion into a mains socket could cause an electrical hazard.

If the colours of the wires in the power cable of this product do not correspond with the markings on the terminals of your plug, proceed as follows.

- The **Blue** wire must be connected to the terminal marked **N** or coloured **Black.**
- The **Brown** wire must be connected to the terminal marked **L** or coloured **Red.**
- The **Yellow and Green** wire must be connected to the terminal marked **E** or ⏚ or coloured **Green.**

Plug must be BS1363/A approved.

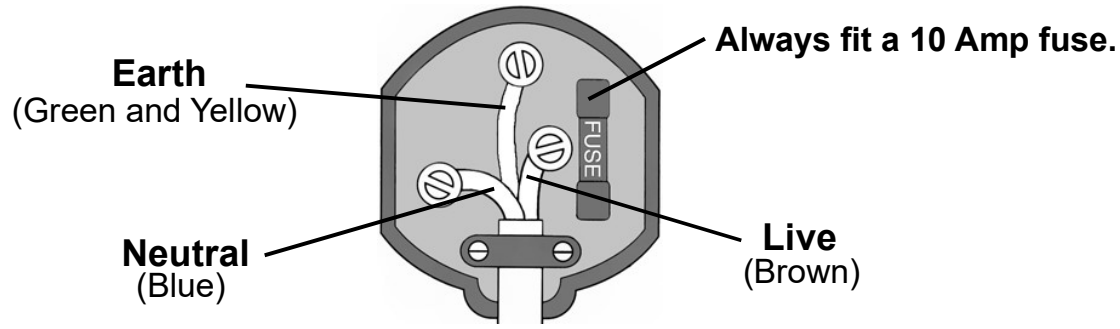

Ensure that the outer sheath of the cable is firmly held by the clamp

We strongly recommend that this machine is connected to the mains supply via a Residual Current Device (RCD). If in any doubt, consult a qualified electrician. DO NOT attempt any repairs yourself.

PREPARATION

WARNING: DISCONNECT THE PUMP FROM THE POWER SUPPLY BEFORE CONNECTING THE HOSE ADAPTOR.

FITTING THE OUTLET ADAPTORS

1. Fit the elbow adaptor to the pump outlet as shown.
2. Screw the multi hose adaptor onto the elbow.
   - The multi hose adaptor is capable of accepting 25mm and 32mm hoses.
3. Simply cut the multi hose connector to the required size and attach a suitable hose using with a worm drive clip.

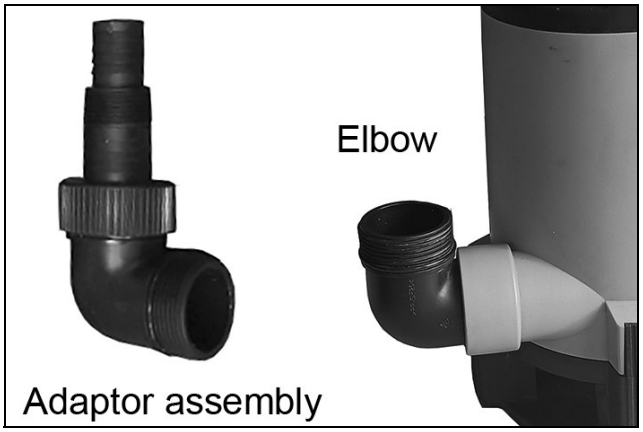

For maximum efficiency, we strongly recommend that you connect a 32mm diameter hose to the multi hose adapter.

Alternatively, you may remove the multi adapter altogether, and screw on a 32mm hose adapter.

SUITABLE HOSES AND REPLACEMENT HOSE ADAPTERS ARE AVAILABLE FROM YOUR CLARKE DEALER.

POSITIONING THE PUMP

WARNING: CHECK THE PUMP FOR DAMAGE BEFORE USE. DO NOT USE THE PUMP IF IT IS DAMAGED IN ANY WAY.

WARNING: NEVER CARRY THE PUMP USING THE POWER CABLE. DAMAGE TO ELECTRICAL CABLES CAN BE HAZARDOUS. ALWAYS USE THE HANDLE WHEN MOVING THE PUMP.

WARNING: THE WATER BEING PUMPED WILL BE POLLUTED IF THIS PUMP BECOMES DAMAGED AND LUBRICANT WITHIN THE PUMP ESCAPES.

1. The pump is completely submersible and should be placed in a vertical position on a solid flat surface, placing the pump on a couple of house bricks if required especially if there is sediment in the area. Place the pump on a flat surface in the area that you want to drain.

Parts & Service: 020 8988 7400 / E-mail: Parts@clarkeinternational.com or Service@clarkeinternational.com

2. **DO NOT** position the pump on sand or ground which is likely to shift.
    - Ensure the pump is positioned with adequate space so that the movement of the float switch is not restricted - recommended minimum area of 45 x 45cm.
    - **ALWAYS** raise and lower the pump using the lifting handle or a rope attached to it.
    - Take all precautions as described on page 3 before switching on.

OPERATING THE PUMP

1. **DO NOT** use the pump if there is any damage to the supply cable or to the float switch or its cable.
2. **NEVER** run the pump dry.
3. Switch the power supply on.
    - The pump will begin to drain water.
    - The float switch which automatically switches the pump ON when the water is above a pre-determined level.
    - As the water level falls, so will the float switch until it stops the pump.

The depth of water to be pumped away can be adjusted by raising and lowering the handle to which the float switch cable is attached.

4. **DO NOT** run the pump with the body exposed for more than a couple of minutes
5. Isolate the pump from the power supply when finished.
    - This pump is fitted with automatic thermal overload protection. If the pump overheats due to an obstruction in the pump or pumping warm water for example, it will shut off automatically. Isolate the pump from the power supply. Check for blockages and allow the motor to cool (at least 5 minutes) before attempting to re-start.
6. **DO NOT** use the pump if the water is liable to freeze as this can cause damage to the pump. Remove the pump from the water and store it in a frost free location.

AFTER USE

If the pump has been used with substances that tend to form a deposit, or with water containing chlorine, rinse it after use with a powerful jet of water in order to avoid the formation of deposits or encrustations which would reduce the pump's performance.

If the temperature is expected to be lower than 0°C, ensure there is no water remaining which could freeze and damage the pump.

MAINTENANCE

WARNING: BEFORE CHECKING THE CONDITION OF THE PUMP, ENSURE IT IS ISOLATED FROM THE POWER SUPPLY. IF THE UNIT IS HARD WIRED, ENSURE THE CIRCUIT BREAKER IS OPEN.

This pump should require no maintenance other than regular cleaning. If the pump starts to show signs of wear or damage, contact your CLARKE dealer for advice.

Check the pump regularly to ensure the water inlet is clear of leaves or other debris taking care to remove any debris from around the impeller. The bottom plate may be unscrewed and lifted off to assist in doing this.

Further cleaning may be required by back-flushing the pump with water pressure from a hose.

DO NOT attempt to repair the pump yourself as you may damage the waterproof seal and invalidate your guarantee. Repairs must be carried out by your CLARKE dealer or contact the CLARKE Service Department on 020 8988 7400.

If the troubleshooting on page 8 does not solve your problem, please contact the CLARKE service department.

PUMP PERFORMANCE GRAPH

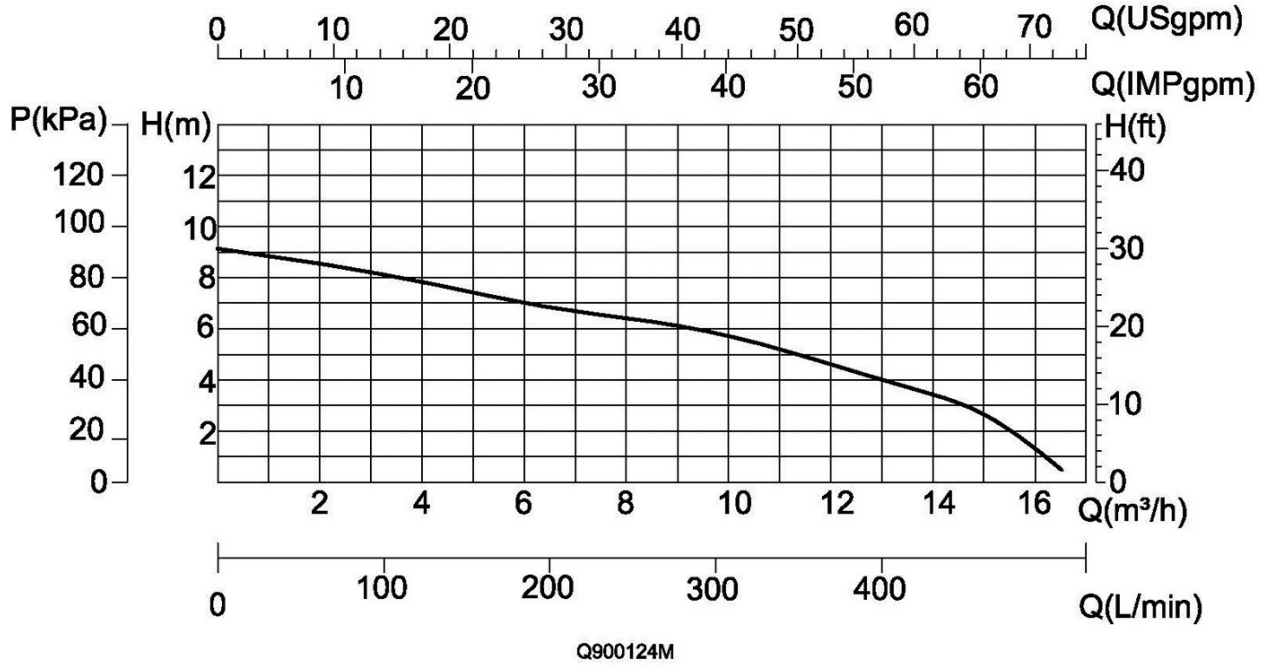

TROUBLESHOOTING

PROBLEM	SOLUTION
PUMP WILL NOT START	1. Check to ensure power is switched on. 2. Check fuse (consult an electrician if in doubt). 3. If extension lead is fitted, check connections (consult an electrician if in doubt). 4. Internal thermal cut-out has not re-set. Leave for 5 minutes and try again. 5. The impeller may be jammed. Disconnect from the power supply, remove the bottom plate and remove any objects that may be obstructing the impeller. Replace the bottom plate and try again. 6. If the pump still fails to start, consult your CLARKE dealer. 7. Float switch may be jammed against side wall or prevented from moving. 8. Water level too low - float switch in OFF position - lift float to check switch.
PUMP WILL START BUT NOT PUMP	1. Check to ensure water entry is not blocked. 2. Discharge tube clogged or obstructed. 3. The head may be too great, i.e. you are trying to lift the water too great a distance for the pump to cope with. (See specification on page 2). 4. Air bubble in the pump, produced during the plunge. Plunge the pump again, at an angle and shake it whilst lowering to remove any air trapped in the system. 5. Impeller may be damaged - Consult your CLARKE dealer.
PUMP DOES NOT STOP	1. Float switch may be prevented from moving to the fully down position. 2. Float switch may be faulty. Consult your CLARKE dealer.
PUMP STOPS RUNNING	1. Thermal overload has operated. If this condition persists, investigate the cause. Are you attempting to pump liquid which is too heavy for the pump (mud, slurry etc.)? 2. Pump has run dry or float switch has cut in. 3. A foreign object has jammed the impeller.

Parts & Service: 020 8988 7400 / E-mail: Parts@clarkeinternational.com or Service@clarkeinternational.com

COMPONENT PARTS

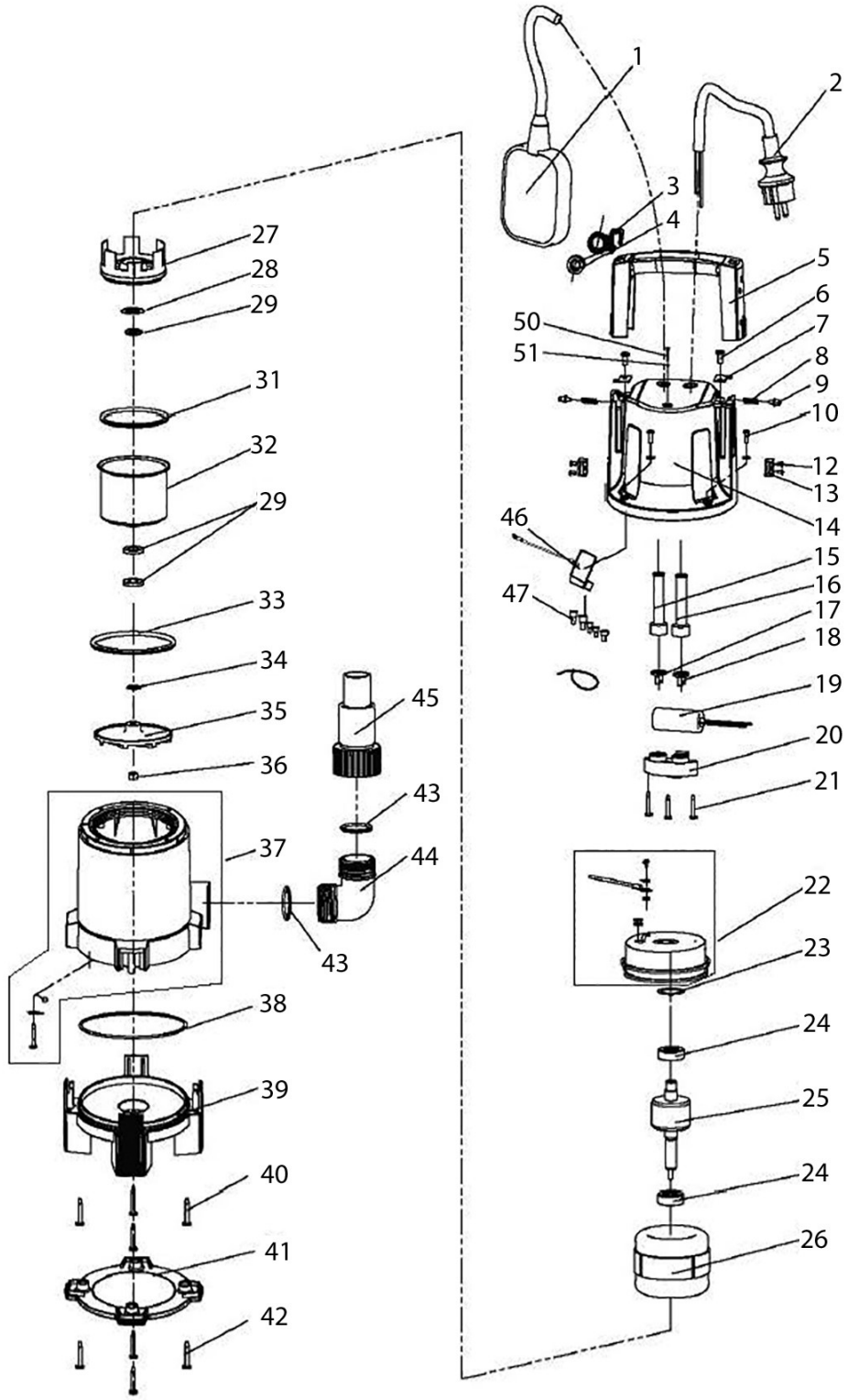

Parts & Service: 020 8988 7400 / E-mail: Parts@clarkeinternational.com or Service@clarkeinternational.com

COMPONENT PARTS

1	Float switch
2	Power cable
3	Wire clip
4	Cable sheath
5	Pump handle
6	Cross head st screw
7	Gasket
8	Spring
9	Round pin
10	Screw
11	n/a
12	St screw
13	Located block
14	Pump housing
15	Cable sheath
16	Cable sheath
17	Cable retainer

18	Cable retainer
19	Capacitor
20	Cable stay
21	St screw
22	Rear motor cover
23	Corrugated washer
24	Bearing
25	Rotor
26	Stator
27	Front liner
28	Front liner
29	Gasket
30	Oil seal
31	O-ring
32	Motor front cover
33	O-ring
34	Adjusting washer

35	Impeller
36	Nut
37	Pump housing
38	O-ring
39	Pump base
40	St screw
41	Base plate
42	X-head st screw
43	O-ring
44	Elbow
45	Outlet connector
46	Pressing block
47	S/t screw
48	n/a
49	n/a
50	S/t screw
51	Washer

GUARANTEE

This product is guaranteed against faulty manufacture for a period of 12 months from the date of purchase. Please keep your receipt which will be required as proof of purchase.

This guarantee is invalid if the product is found to have been abused or tampered with in any way, or not used for the purpose for which it was intended.

Faulty goods should be returned to their place of purchase, no product can be returned to us without prior permission.

This guarantee does not effect your statutory rights.

UK CA

Clarke® INTERNATIONAL

Hemnall Street, Epping, Essex, CM16 4LG

DECLARATION OF CONFORMITY

This is an important document and should be retained.

We hereby declare that this product(s) complies with the following legislation:

2014/30/EU	*Electromagnetic Compatibility Directive*
2006/42/EC	*Machinery Directive*
2011/65/EU	*Restriction of Hazardous Substances (RoHS) Directive*

The following standards have been applied to the product(s):

IEC 62321-7-1:2015, IEC 62321-7-2:2017, IEC 62321-1:2013, IEC 62321-2:2021, IEC 62321-5:2013, EN IEC 61000-3-2:2019/A1:2021, EN IEC 55014-1:2021, EN IEC 55014-2:2021, IEC 62321-12:2023, IEC 60335-1:2010+COR1:2010+COR2:2011+AMD1:2013+COR1:2014+AMD2:2016+COR1:2016, IEC 62321-4:2013+A1:2017, IEC 60335-2-41:2012, IEC 62321-3-1:2013, IEC 62321-8:2017, EN 61000-3-3:2013/A1:2019/A2:2021, IEC 62321-6:2015

The technical documentation required to demonstrate that the product(s) meet(s) the requirement(s) of the aforementioned legislation has been compiled and is available for inspection by the relevant enforcement authorities.

The UKCA mark was first applied in: 2026

Product Description:	Submersible Pump
Model Number(s):	CSE2B
Serial/Batch Number:	Refer to product/packaging label
Date of Issue:	25/03/2026

Signed:

J.A Clarke

Director

CE

Clarke® INTERNATIONAL

Fitzwilliam Hall, Fitzwilliam Place, Dublin 2

DECLARATION OF CONFORMITY

This is an important document and should be retained.

We hereby declare that this product(s) complies with the following legislation:

2014/30/EU	*Electromagnetic Compatibility Directive*
2006/42/EC	*Machinery Directive*
2011/65/EU	*Restriction of Hazardous Substances (RoHS) Directive*

The following standards have been applied to the product(s):

IEC 62321-7-1:2015, IEC 62321-7-2:2017, IEC 62321-1:2013, IEC 62321-2:2021, IEC 62321-5:2013, EN IEC 61000-3-2:2019/A1:2021, EN IEC 55014-1:2021, EN IEC 55014-2:2021, IEC 62321-12:2023, IEC 60335-1:2010+COR1:2010+COR2:2011+AMD1:2013+COR1:2014+AMD2:2016+COR1:2016, IEC 62321-4:2013+A1:2017, IEC 60335-2-41:2012, IEC 62321-3-1:2013, IEC 62321-8:2017, EN 61000-3-3:2013/A1:2019/A2:2021, IEC 62321-6:2015

The technical documentation required to demonstrate that the product(s) meet(s) the requirement(s) of the aforementioned legislation has been compiled and is available for inspection by the relevant enforcement authorities.

The CE mark was first applied in: 2026

Product Description:	Submersible Pump
Model Number(s):	CSE2B
Serial/Batch Number:	Refer to product/packaging label
Date of Issue:	25/03/2026

Signed:

J.A Clarke

Director

Parts & Service: 020 8988 7400 / E-mail: Parts@clarkeinternational.com or Service@clarkeinternational.com

A SELECTION FROM THE VAST RANGE OF

Clarke®

QUALITY PRODUCTS













AIR COMPRESSORS
From DIY to industrial, Plus air tools, spray guns and accessories.

GENERATORS
Prime duty or emergency standby for business, home and leisure.

POWER WASHERS
Hot and cold, electric and engine driven - we have what you need

WELDERS
Mig, Arc, Tig and Spot.
From DIY to auto/industrial.

METALWORKING
Drills, grinders and saws for DIY and professional use.

WOODWORKING
Saws, sanders, lathes, mortisers and dust extraction.

HYDRAULICS
Cranes, body repair kits, transmission jacks for all types of workshop use.

WATER PUMPS
Submersible, electric and engine driven for DIY, agriculture and industry.

POWER TOOLS
Angle grinders, cordless drill sets, saws and sanders.

STARTERS/CHARGERS
All sizes for car and commercial use.

PARTS & SERVICE:
0208 988 7400

Parts Enquiries
Parts@clarkeinternational.com

Servicing & Technical Enquiries
Service@clarkeinternational.com

SALES: UK 01992 565333 or Export 00 44 (0)1992 565335

Clarke® INTERNATIONAL Hemnall Street, Epping, Essex CM16 4LG
www.clarkeinternational.com